ANTI-RECOIL TECHNOLOGY

This prevents the G-Force® and Easy Arm® units from moving or recoiling when there is a sudden change in load, reducing the risk of potentially serious injury.

FLOAT MODE

The G-Force® and Easy Arm® units offer our versatile Float Mode. With as a little as 1/2lb (227 g) of force on the load itself, operators can precisely orient loads throughout the full stroke range by manipulating the load with their hands.

POWER LOSS PROTECTION

A fail safe load braking system locks the unit in place in the event of a power loss.

BLAZING SPEEDS

With G-Force® speeds reaching 200 fpm (61 mpm) and Easy Arm® speeds reaching 180 fpm (55 mpm), these devices travel up to 4 times faster than traditional high-end lifting devices currently on the market, making them the fastest, most precise lifting devices on the planet.

OPERATOR PRESENT DETECTION

Each of our seven handle configurations has Operator Present Detection that doesn't allow the unit to move unless the operator initiates the movement.

CAPACITY OVERLOAD

The units have a factory setting that prevents them from lifting a load if it exceeds their capacity. There's also a setting that users can electronically set within the menu if a smaller capacity overload limit is desired.

THE SAFE ALTERNATIVE

Operators want to use our G-Force® technology because it's easy to learn and easy to use. Our Intelligent Lifting Devices are safer than manual lifting and dramatically reduce worker injury cost.

INFINITE SPEED CONTROL

Gorbel's Intelligent Lifting Devices move with the operator. They move as fast or as slow as the operator chooses to move. They are ideal for applications that require high speed at some points in the cycle and slow, precise movements at other points.

PINPOINT PRECISION

Our Intelligent Lifting Devices deliver unparalleled precision with speeds of less than 1 fpm (0.3 mpm). This gives the operator the control necessary to finesse expensive or fragile parts.

CONTROL

CUTTING EDGE CONTROL TECHNOLOGY

G-Force® now uses the latest processor to offer you the most advanced features in the intelligent lifting market. Our cutting edge units are available in two models – our base model, the Q2, loaded with intelligence features for most applications, and our enhanced model, the iQ2, which offers even more configuration options with electrical control Input/Output (I/O) points at the handle and in the actuator.

- Updated computer based user interface makes configuration a breeze.
- More customizable handle-based I/O options mean the lower priced Q2 model can handle a wider range of simple applications.
- User configurable I/O on the iQ2 model means less need for potentially costly custom programming.
- Built-in wireless connectivity via WiFi, along with wired functionality, so you no longer have to plug in a cable for servicing, troubleshooting, or diagnostics.
- Handle and visualization interfaces are now available in 6 languages — English, French, German, Italian, Mandarin, and Spanish.

Standard Features	Q2	iQ2
Anti-recoil technology	x	x
Infinite speed control	x	x
Power loss protection	x	x
Blazing speeds up to 200 fpm	x	x
Operator present detection	x	x
Capacity overload	x	x
Float mode	x	x
Pinpoint precision	x	x
User settable load limiting	x	x
G360 collector and air swivel	x	x
OLED display	x	x
Multiple language capabilities and on-screen handle display	x	x
Seven different handle configurations	x	x
Menu setting lock out feature	x	x
User settable maintenance alerts	x	x
Fault code history log	x	x
G-Link Smart Connect IoT connectivity enabled	x	x
Virtual limits	3 sets	Multiple sets
24 volt DC power available at handle	x	x
User configurable Inputs and Outputs on the handle	2 Inputs 2 Outputs	8 points that can be configured as Inputs or Outputs*
User configurable Inputs and Outputs at the actuator	None	8 Inputs 4 Outputs
Tablet or PC based wireless user interface w/I/O + Custom Logic Configurator	Basic	Advanced
Anti-drop functionality for tooling control	x	x
Auto-home	x	x

*with optional expansion I/O block

G-LINK SMART CONNECT

Technology continues to transform the manufacturing world at an exhilarating rate. By facilitating communication between devices on the plant floor and with the internet, we have unprecedented access to data that we can have to improve every facet of production and maintenance.

That drive to be connected led us to design our new G-Force® and Easy Arm® Q2 and iQ2 units with G-Link Smart Connect. The G-Link Smart Connect solutions will enable G-Force® and Easy Arm® units to transmit data locally or anywhere with internet access. This will allow users to set parameters and view vital data remotely from their desktop, laptop, or tablet.

Two connectivity packages:

G-Link

Access inside local network in addition to Line of Sight

- Expands access from Line of Sight to internal network
- Allows users to set parameters remotely from desktop, laptop, or tablet
- Data can be shared with other devices on the network (tooling, conveyors, etc). Actions may be triggered on another device or machine based on what happens with the G-Force®
- Decreases the need for costly custom programs as the user can set many unique parameters on their own

G-Link Insights

Complete access by user and permission based access by Gorbel®, along with a cloud-based dashboard for data trending and analytics

- Allows Gorbel® to troubleshoot remotely
- Provides user-friendly dashboard on the cloud so that users can monitor all units, set notifications, and receive pertinent data "at a glance" through a variety of graphs and widgets
- User can see aggregate data as well as individual unit data
- Gorbel® can transmit upgrades and changes in software directly to the units
- Allows warning criteria to be easily set and readily available so immediate action may be taken

CONNECT

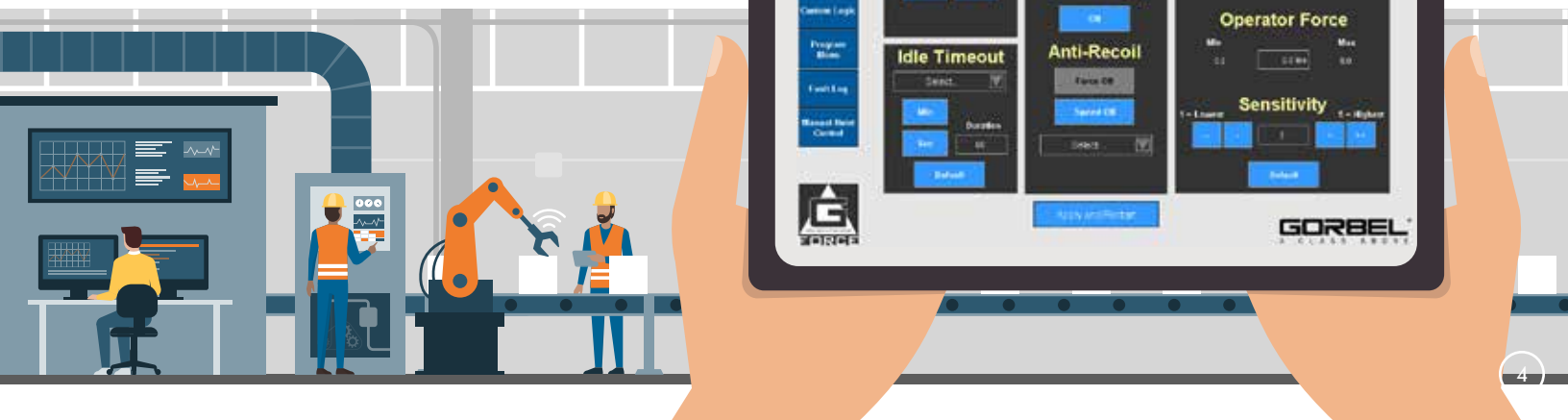

G-FORCE

G-FORCE® Q2 AND iQ2
BRIDGE CRANE MOUNTED INTELLIGENT LIFTING DEVICE

When precision, lifting power and speed are necessities, turn to Gorbel's patented G-Force® Intelligent Lifting Device. More precise than hoists, more responsive than air balancers, our bridge crane mounted G-Force® units improve safety, productivity and quality, resulting in a direct increase to your bottom line.

CHOOSE A BRIDGE MOUNTED CRANE CONFIGURATION FOR:

- Higher capacities: available in 165, 330, 660, and 1320 lb capacities
- Faster speeds: maximum speeds up to 200 fpm
- More responsive performance: faster acceleration and deceleration
- Covering multiple work cells with one G-Force®

APPLICATIONS:

- Automotive assembly (engines, transmissions, chassis components)
- Heavy equipment manufacturing
- Tool & die changeouts
- Natural gas & oil industry (valves, drilling components, etc)
- Repetitive lifting jobs
- Parts assembly
- Machining
- Process equipment maintenance
- Covering larger single work areas

www.gorbel.com
800.821.0086

HANDLES

Q2 AND iQ2 HANDLE CONFIGURATION OPTIONS

The G-Force® and Easy Arm® were designed to provide flexibility in handle configurations. Your Gorbel distributor or your tooling integrator can help you choose the handle configuration best suited for your application.

See tooling examples on pages 15-16.

In-Line Slide Handle

The in-line slide handle allows the operator to get close to the load for more control and precision. With this handle, the load moves with the motion of the operator's hand.

Remote Mount Slide Handle

This configuration offers the same smooth control as the slide handle, but accommodates set-ups where the operators can't be close to the load.

Suspended Pendant Control Handle

This handle is ideal when you have limited headroom, when the operator can't get close to the load or when the operator needs maximum lifting stroke. This handle can also be used when you expect the load to bounce or tip during lifting.

Remote Mount Pendant Control Handle

Choose this design when the handle is mounted more than one foot from where the wire rope attaches to tooling, or when you expect the load to bounce or tip during lifting.

FORCE SENSING HANDLES FOR G-FORCE® AND EASY ARM®

The Force Sensing Handles offer versatility in ergonomic lifting. Compared to standard slide handles, which use displacement of the handle to initiate upward or downward motion, this design senses force applied without any handle motion. This creates a versatile option for tooling, or elongated handles that perfectly serve applications with a wide range of motion.

In-Line (FSI)

When very low or very high pick and place points require hand-over-hand lifting. Eliminates the need to bend over to reach into deep bins or dunnage.

Hub (FSH)

Provides the most flexibility for custom tooling solutions by allowing a wide range of handle bars (by others) to be mounted to the hub. The hub can also be mounted anywhere on the custom tooling frame. When the operator needs to control up/down motion by applying force to any point on the handle bars or other control fixtures attached at the hub.

Remote mounted (FSR)

Provides the ability to remote mount a 24" or 36" Force Sensing Handle to a tooling frame (by others). This is beneficial for ergonomically reaching high and low pick/place points.

G-FORCE

G-FORCE® Q2 AND iQ2:
BRIDGE CRANE MOUNTED LIFTING DEVICE

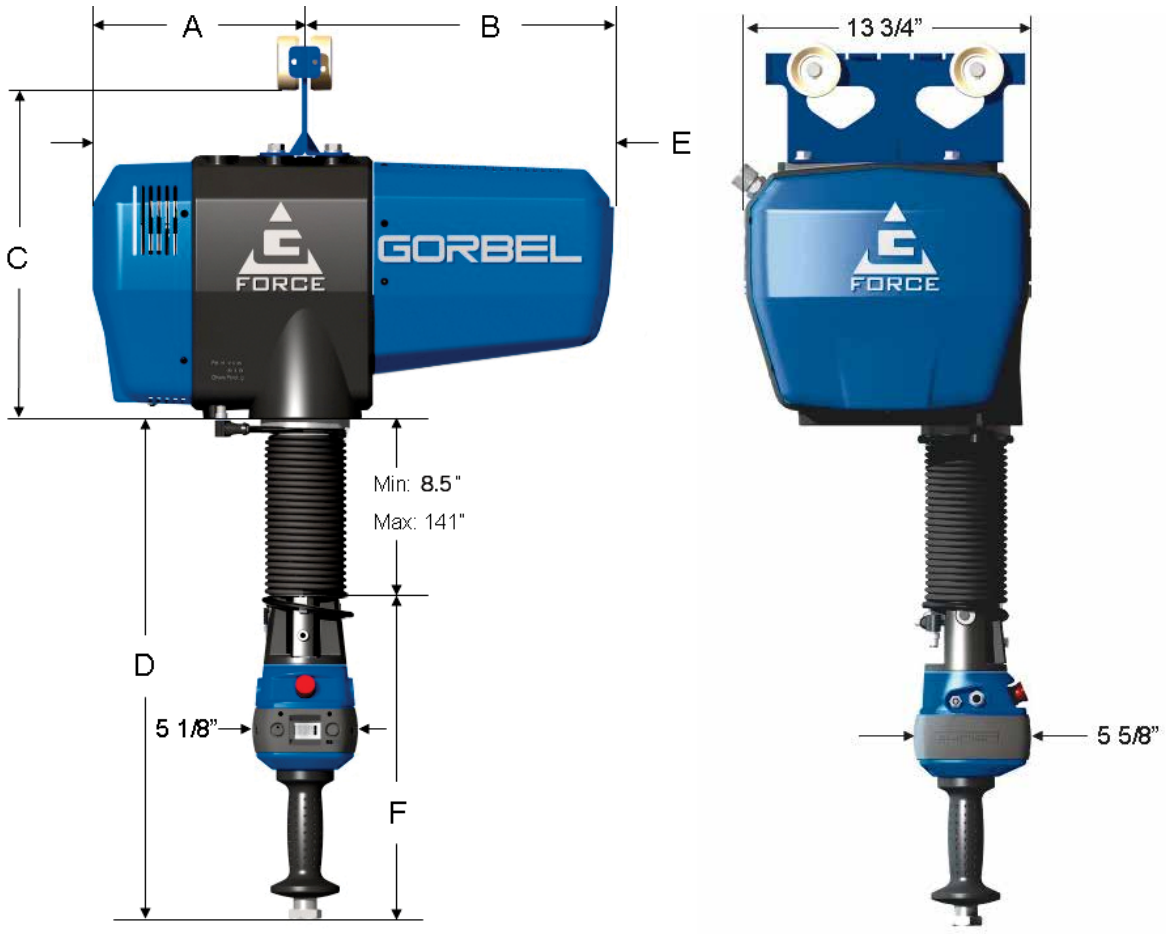

Capacity	165 lb (75 kg)	330 lb (150 kg)	660 lb (300 kg)
A	8.625" (219mm)	10.25" (260mm)	10.25" (260mm)
B	14.375" (365)	15" (381)	15" (381)
C	17" (432)	17" (432)	17" (432)
D	26" (660)	26" (660)	26" (660)
E	23" (584)	25.25" (641)	25.25" (641)
F	16" (406)	16" (406)	16" (406)

C dimension may change according to the track series you're using. Consult factory for actual dimension.
D references unit in full up position.

HANDLE CONFIGURATION OPTIONS

Dim	Remote Mount Slide	Suspended Pendant Control	Remote Mount Pendant Control
D	17.5" (445mm)	8.5" (216mm)	17.5" (445mm)
F	14.25" (362)	14" (356)	14" (356)

FORCE SENSING HANDLES

In-Line

Remote Mounted

Hub

1320 LB. UNIT
HANDLE CONFIGURATIONS

In-Line Slide

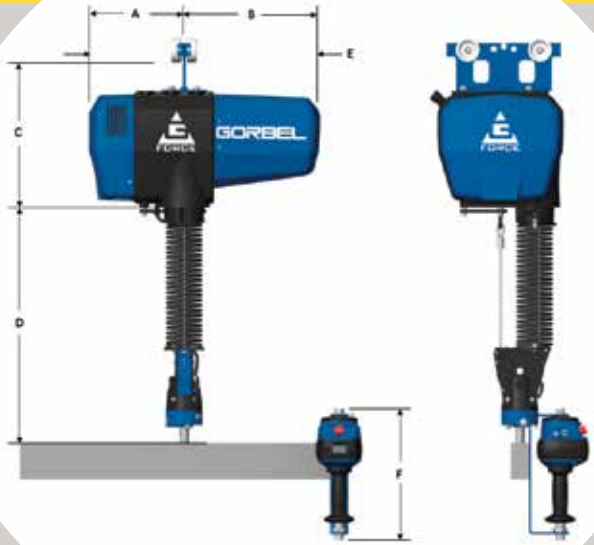

Remote Slide

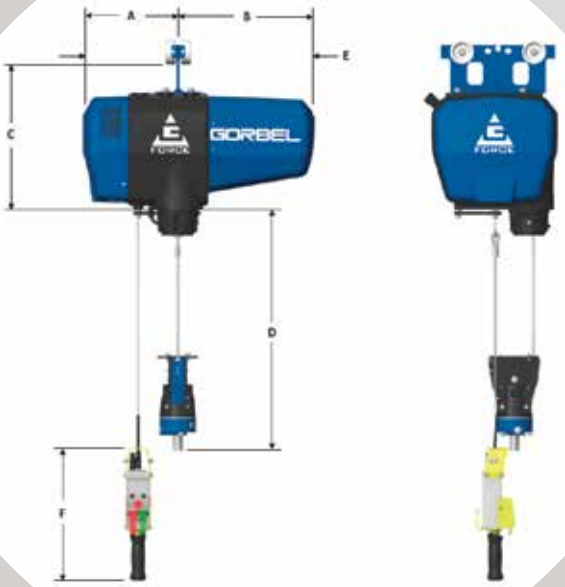

Suspended Pendant

Remote Pendant

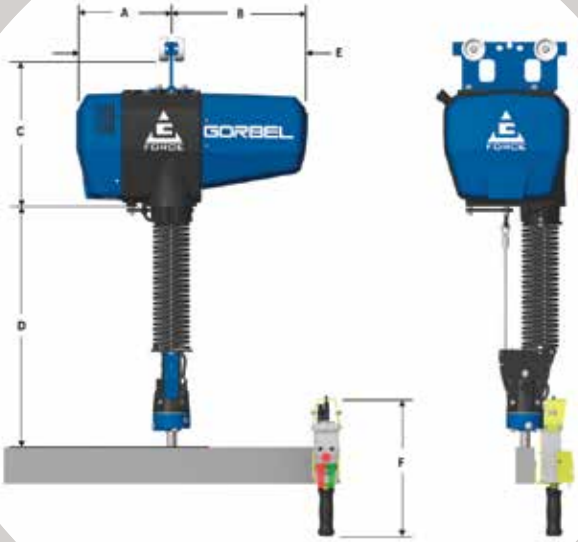

Dim	In-Line Slide	Remote Slide	Remote Pendant	Suspended Pendant
A	10.25" (260mm)	10.25" (260mm)	10.25" (260mm)	10.25" (260mm)
B	15" (381)	15" (381)	15" (381)	15" (381)
C	17" (432)	17" (432)	17" (432)	17" (432)
D	30.5" (775)	21.5" (546)	21.5" (546)	17.5" (445)
E	25.25" (641)	25.25" (641)	25.25" (641)	25.25" (641)
F	19.5" (495)	14.25" (362)	14" (356)	14" (356)

D references unit in full up position.

GORBEL'S G-FORCE® TECHNOLOGY: PROVEN PERFORMANCE

ERGONOMIC STUDY

The following summary is based on a study performed by the Rochester Institute of Technology. The study compared the performance of Gorbel's G-Force® Intelligent Lifting Device to other lifting devices. It focused on High Cycle Applications and Precision Placement Applications. To read the whole study, go to: http://www.gorbel.com/pdfs/study/gforceergostudy.pdf.

High Cycle Test

Operators were:

- 124% more productive with the G-Force® than with air balancers
- 74% more productive with the G-Force® than with variable frequency drive hoists

* Manual: 75% of the subjects could not complete 10 minutes of lifting & still maintain safe heart rates.

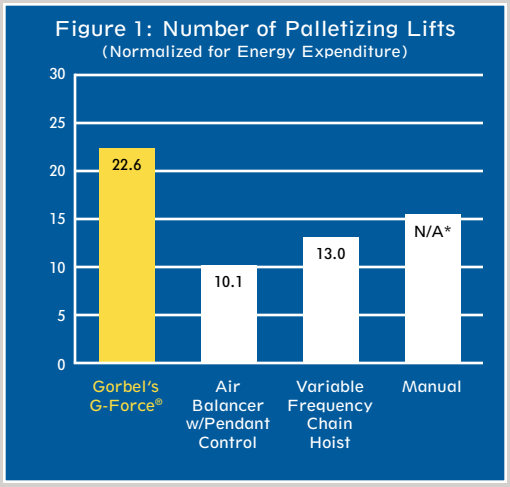

Precision Placement Test

Operators were:

- 76% more productive with the G-Force® than with air balancers
- 59% more productive with the G-Force® than with variable frequency drive hoists

* Manual: None of the subjects could complete 10 minutes of lifting w/o exceeding safe heart rates.

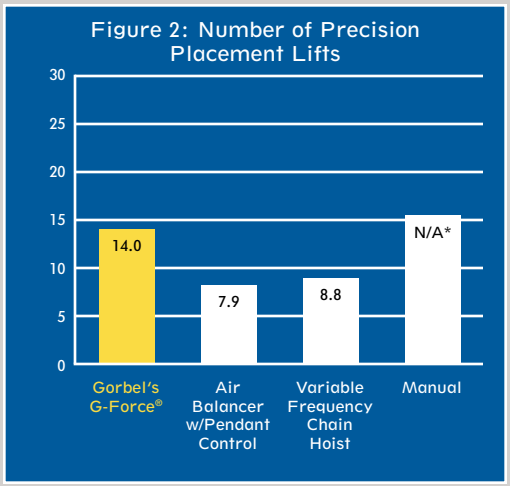

Force of Placement

The G-Force® was:

- 2.5x less likely to damage the load than the air balancer with pendant control
- 3.3x less likely to damage the load than the variable frequency drive hoists
- 2.2x less likely to damage the load than manual

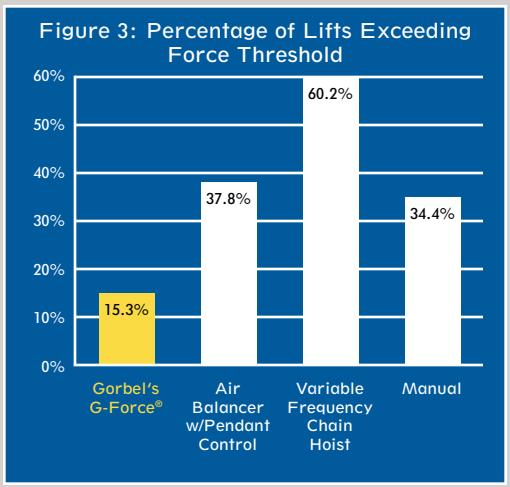

www.gorbel.com

800.821.0086

EASY ARM® Q2 AND iQ2:
FREE STANDING LIFTING DEVICE

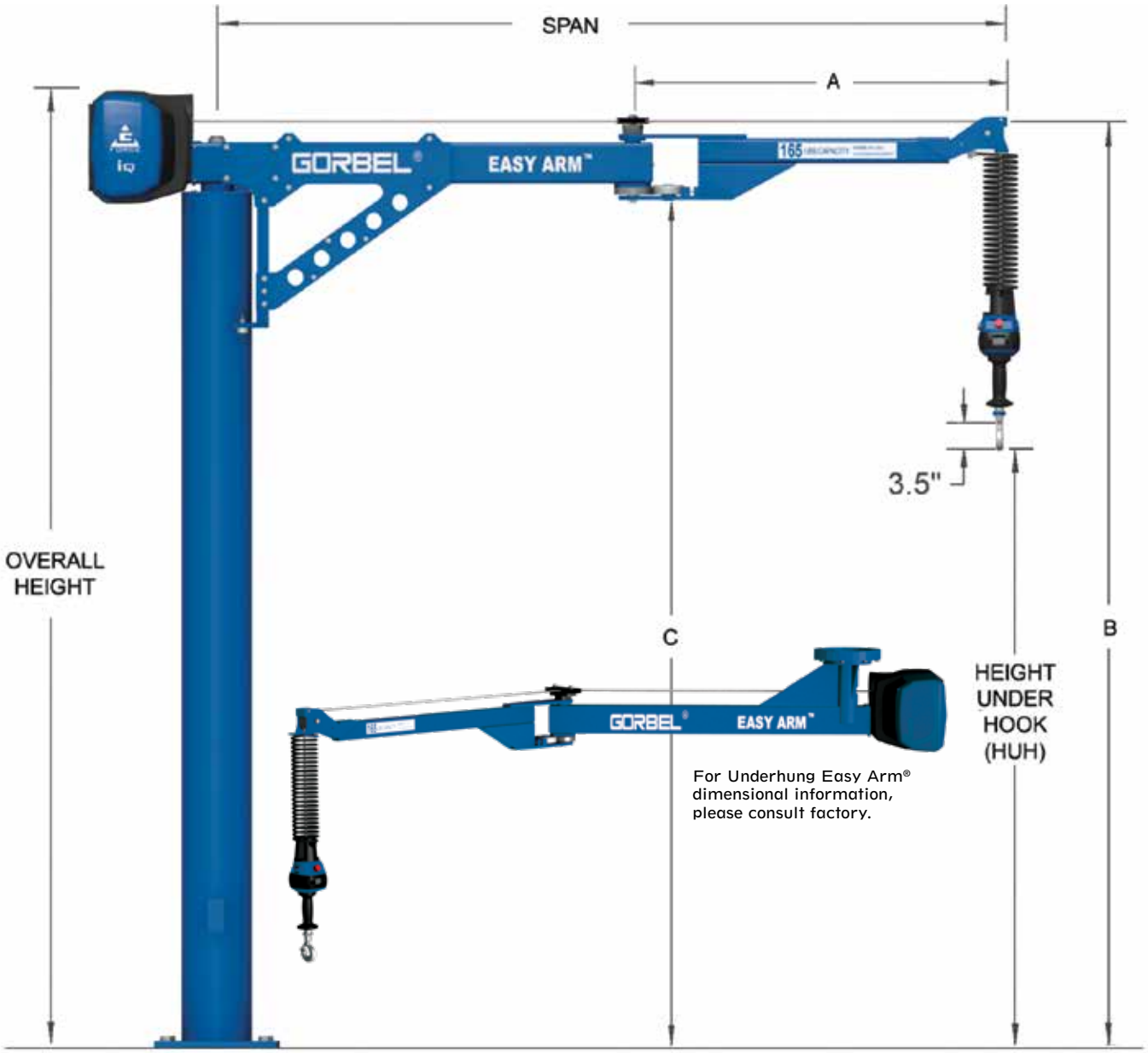

For Underhung Easy Arm® dimensional information, please consult factory.

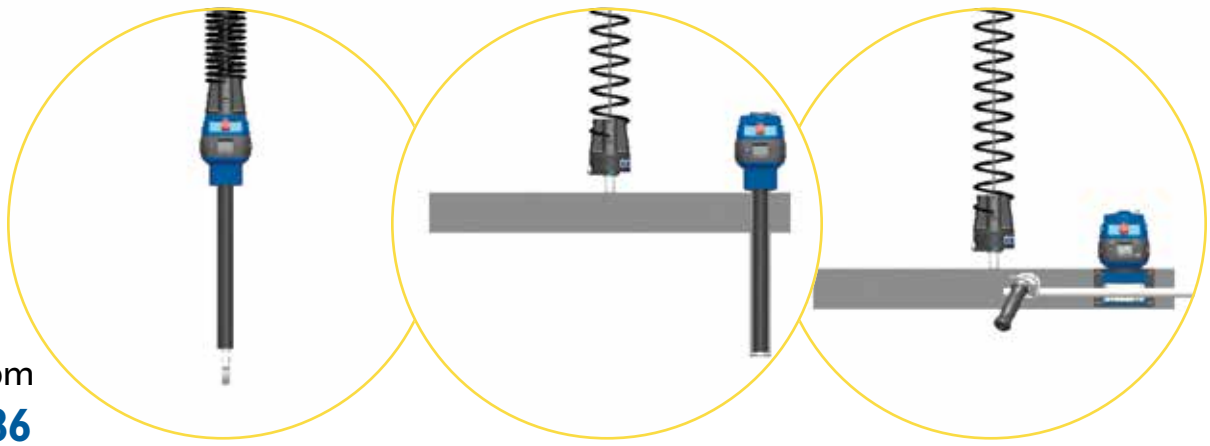

www.gorbel.com

800.821.0086

165 LB (75 KG) UNIT

Span	6′ (1829mm)	8′ (2438mm)	10′ (3048mm)	12′ (3658mm)	14′ (4267mm)	6′ (1829mm)	8′ (2438mm)	10′ (3048mm)	12′ (3658mm)	14′ (4267mm)	6′ (1829mm)	8′ (2438mm)	10′ (3048mm)	12′ (3658mm)	14′ (4267mm)
HUH	6′ (1829)					8′ (2438)					10′ (3048)				
OAH	109.14″ (2772)					133.14″ (3382)					157.14″ (3991)				
A	33.84″ (860)	45.12″ (1146)	56.40″ (1433)	67.68″ (1719)	78.96″ (2006)	33.84″ (860)	45.12″ (1146)	56.40″ (1433)	67.68″ (1719)	78.96″ (2006)	33.84″ (860)	45.12″ (1146)	56.40″ (1433)	67.68″ (1719)	78.96″ (2006)
B	105.98″ (2692)					129.98″ (3301)					153.98″ (3911)				
C	97.89″ (2486)					121.89 (3096)					145.89″ (3706)				
D	24.90″ (632)	32.06″ (814)	40.03″ (1017)	48.00″ (1219)	56″ (1422)	24.90″ (632)	32.06″ (814)	40.03″ (1017)	48.00″ (1219)	56″ (1422)	24.90″ (632)	32.06″ (814)	40.03″ (1017)	48.00″ (1219)	56″ (1422)

330 LB. (150 KG) UNIT

Span	6′ (1829mm)	8′ (2438mm)	10′ (3048mm)	12′ (3658mm)	14′ (4267mm)	6′ (1829mm)	8′ (2438mm)	10′ (3048mm)	12′ (3658mm)	14′ (4267mm)	6′ (1829mm)	8′ (2438mm)	10′ (3048mm)	12′ (3658mm)	14′ (4267mm)
HUH	6′ (1829)					8′ (2438)					10′ (3048)				
OAH	109.88″ (2791)					133.88″ (3401)					157.88″ (4010)				
A	33.84″ (860)	45.12″ (1146)	56.40″ (1433)	67.68″ (1719)	78.96″ (2006)	33.84″ (860)	45.12″ (1146)	56.40″ (1433)	67.68″ (1719)	78.96″ (2006)	33.84″ (860)	45.12″ (1146)	56.40″ (1433)	67.68″ (1719)	78.96″ (2006)
B	106.86″ (2714)					130.86″ (3324)					154.86″ (3933)				
C	97.77″ (2483)					121.77″ (3093)					145.77″ (3703)				
D	24.34″ (618)	32.26″ (819)	42.70″ (1085)	51.48″ (1308)	59.76″ (1518)	24.34″ (618)	32.26″ (819)	42.70″ (1085)	51.48″ (1308)	59.76″ (1518)	24.34″ (618)	32.26″ (819)	42.70″ (1085)	51.48″ (1308)	59.76″ (1518)

Please note:
These dimensions are for Easy Arm® units with in-line slide handles only. Units with suspended pendant handles will have different dimensions. Please contact Gorbel at (800) 821-0086 for these dimensions. Other Heights Under Hook are available as special orders; contact factory.
Dimensions shown in parentheses are in millimeters.

660 LB. (300 KG) UNIT

Span	8′ (2438mm)	10′ (3048mm)	12′ (3658mm)	14′ (4267mm)	8′ (2438mm)	10′ (3048mm)	12′ (3658mm)	14′ (4267mm)	8′ (2438mm)	10′ (3048mm)	12′ (3658mm)	14′ (4267mm)
HUH	6′ (1829)				8′ (2438)				10′ (3048)			
OAH	122″ (3099)				146″ (3708)				170″ (4318)			
A	45.12″ (1146)	56.4″ (1433)	67.68″ (1719)	78.96″ (2006)	45.12″ (1146)	56.4″ (1433)	67.68″ (1719)	78.96″ (2006)	45.12″ (1146)	56.4″ (1433)	67.68″ (1719)	78.96″ (2006)
B	114.22″ (2901)				138.22″ (3511)				162.22″ (4120)			
C	94.39″ (2398)		91.66″ (2329)		118.39″ (3007)		115.66″ (2938)		142.39″ (3617)		139.66″ (3547)	
D	40.1″ (1019)	50.1″ (1273)	60.1″ (1527)	70.1″ (1781)	40.1″ (1019)	50.1″ (1273)	60.1″ (1527)	70.1″ (1781)	40.1″ (1019)	50.1″ (1273)	60.1″ (1527)	70.1″ (1781)

BASEPLATE DIMENSIONS

Please note: Hex baseplates are used on all 330 lb units, and on 165 lb units with a combined HUH plus span of 18′ or more. All other 165 lb units use a square baseplate.

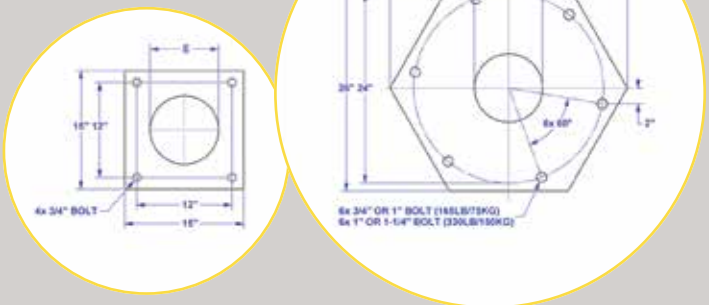

HOOK COVERAGE

Arm Rotation:
355° primary arm
320° secondary arm

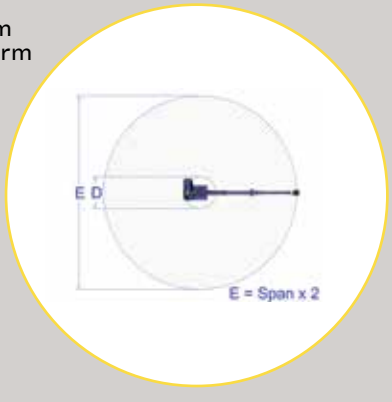

G-FORCE TOOLING

Gorbel G-Force® and Easy Arm® Intelligent Lifting Devices are high speed, high precision, intelligent lifting devices that often require end tooling to complete a total solution that will grip, lift, move, lower and release a load and allowing the full benefit of increased productivity, reduced product damage and superior ergonomics. Choosing the right end-effector tooling to complement your G-Force® and Easy Arm® is the key to maximizing your lifting solution. End-effector tooling engages the load so it can be lifted and manipulated in whatever way your application requires – whether the load needs to be flipped, turned, or rotated. Gorbel dealers utilize our worldwide network of tooling integrators to provide the best solution for your application. This gallery of solutions shows different examples of Gorbel G-Force® and Easy Arm® units with end effectors to help you visualize the range of potential solutions for your lifting applications.

OD GRIPPER

Remote mounted pendant handle for gripping wheel and tire assemblies. Utilizes anti-drop intelligence feature of iQ model which doesn't allow release of the load in the air.

PLATE GRIPPER

Vertical to horizontal pitch function. In-line slide handle. May be used for steel plate or any other material.

BOX OR BUCKET LIFTER

Vacuum cups with Force Sensing Hub grips from side and top of boxes or buckets to maintain integrity of the package and allow high and low layer palletizing/ de-palletizing.

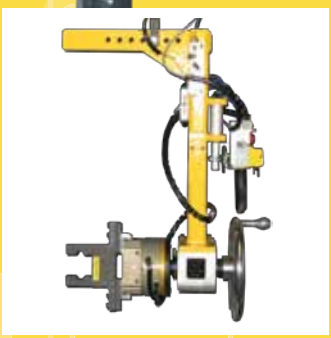

TWO JAW GRIPPER

Remote pendant handle integrated pneumatic gripper, with manual rotate and adjustable center of gravity. Jaws can be customized to fit the geometry of any part.

TUBE LIFTER

Permanent magnet with pneumatic release. In-line slide handle. Also works with any round ferrous bar stock or cylindrical objects.

PLATE/SHEET LIFTER

Permanent magnet with pneumatic release. In-line slide handle. Size of magnets and configuration of magnet array can be customized to fit larger ferrous plates or sheets.

CASTING LIFTER

Force Sensing Hub. Magnetically grips and lifts coated metal castings from molds. Also includes a feature that uses high pressure air to release part from mold.

PLATE PICKER

Extended remote mounted pendant handle allows reaching over a plasma cutting table to remove cut parts or other applications where an extended reach is needed.

DRUM LIFTER

Force sensing hub vacuum with quick-change adapter and 3 different vacuum heads to lift drums, bags, and cardboard boxes with the same system.

PLATE PICKER

Magnet gripper with air actuated release and force sensing handle allows lifting and lowering without bending over to pick or place the load.

VACUUM CLAMP

Two-cup vacuum tool on two linear actuators use both clamping and vacuum to pick or place cabinets, enclosures, or other large box-type loads.

SPOOL GRIPPER

Pneumatic OD clamp with remote mounted pendant handle grips spools of wire, cable, or other material. A pitch function positions the spool horizontally or vertically.

ID GRIPPER

Pneumatic two-jaw ID gripper with automatic (button-less) clamp/unclamp function combines well with the Force Sensing Hub for high speed pick and place applications.

WHEEL LIFTER

Remote pendant handle pairs with a pneumatic OD gripper to lift and move car, truck, or heavy equipment wheels.

TIRE/WHEEL PICKER

Expanding air bladder is attached to an automatic clamp/unclamp unit with the Force Sensing Hub to pick and place wheels, with or without tires. Dual handles allow ergonomic high/low lifting.

PNEUMATIC CLAMP

Versatile clamping tool with in-line slide handle grips any load with flat sturdy sides such as car batteries, blocks, or metal blanks.

BIN LIFTER

Gripper with remote mounted pendant handle has rotate function to allow lifting and dumping of bins.

ROLL TURNER

Simple non-powered, mechanical ID roll lifter engages the core of the roll. Combined with the remote mounted slide handle, this unit also effortlessly rotates from vertical to horizontal.

SLEEVE PICKER

Manually actuated ball-lock pin engages the steel sleeve for lifting. Paired with a remote mount slide handle.

MANUAL TONG

Flexible three way tong grab with in-line slide handle allows lifting of a range of different diameter loads.

SOFT TOUCH CONTROL HANDLES

Use our Soft Touch Control Handles to control any air or electric powered equipment, such as end-effector tooling for the G-Force® or Easy Arm®. A common handle base for air or electric applications gives you design commonality and flexibility, whether your application requires air valves for direct control of end tooling, or electric switches to activate your G-Force® or Easy Arm® inputs.

MAKE TOOLING INTEGRATION EASIER

- Flexible design easily integrates into new equipment layouts
- Easy replacement of any standard pneumatic or electric handles
- Engineered for easy use to reduce potential for fatigue and repetitive stress injuries
- Offers more flexibility in tooling choices and the ability to customize tooling for applications
- Costs less than most comparable handles

CASE STUDIES

G-FORCE® IN ACTION: PAPER PLANT

This manufacturer of paper products replaced their air balancers with a Gorbel® Easy Arm® to change out roll cores in their plant. The switch has enabled the production process to run smoother and they've increased productivity.

URL: https://www.gorbel.com/solutions-center/ergonomic-lifting/paper-manufacturer-benefits-from-intelligent-lifting-solution

G-FORCE® IN ACTION: POWDER COATING OPERATION

This powder coating company turned their two person operation into a one person job by replacing a forklift with a G-Force® Intelligent Lifting Device.

URL: https://www.gorbel.com/solutions-center/ergonomic-lifting/powder-coating-g-force-intelligent-lifting-device-reduces-labor-costs-and-provides-safe-solution

GORBEL'S Q2 AND iQ2 TECHNOLOGY: TECHNICAL SPECIFICATIONS

BRIDGE MOUNTED G-FORCE® Q2 AND iQ2 QUICK FACTS

G-Force®	Q2	iQ2	Q2	iQ2	Q2	iQ2	Q2	iQ2
Maximum Capacity	165 lb 75 kg		330 lb 150 kg		660 lb 300 kg		1320 lb 600 kg	
Maximum Lifting Speed Unloaded	200 ft/min 61 m/min		100 ft/min 30 m/min		50 ft/min 14.94 m/min		25 fpm 7.47 m/min	
Maximum Lifting Speed Fully Loaded	125 ft/min 38 m/min		75 ft/min 23 m/min		42 ft/min 12.80 m/min		21 fpm 6.4 m/min	
Maximum Float Mode Lift Speed	103 ft/min 31 m/min		65 ft/min 20 m/min		38 ft/min 11.58 m/min		19 fpm 5.79 m/min	
Duty Cycle	H5		H5		H4		H3	

FREE STANDING EASY ARM® Q2 AND iQ2 QUICK FACTS

Easy Arm®	Q2	iQ2	Q2	iQ2	Q2	iQ2
Maximum Capacity (Load & Tool)	165 lb 75 kg		330 lb 150 kg		660 lb 300 kg	
Maximum Lifting Speed Unloaded	180 fpm 55 mpm		90 fpm 27 mpm		50 fpm 14.9 mpm	
Maximum Lifting Speed Fully Loaded	125 fpm 38 mpm		75 fpm 23 mpm		42 fpm 12.8 mpm	
Maximum Float Mode Lifting Speed	103 fpm 31 mpm		65 fpm 20 mpm		38 fpm 11.58 mpm	
Maximum Lift Range	11 ft 3.35 m		11 ft 3.35 m		11 ft 3.35 m	

Q2 AND iQ2 TECHNICAL SPECS

G-Force® and Easy Arm®	Q2 iQ2
Primary Lift Voltage (VAC)	220 +/- 10%, single phase
Maximum Current (Amps)	6
Duty Cycle	H3 - H5
Operating Temperature Range	41 - 122° F 5 - 50° C
Operating Humidity Range (Non-Condensing)	35 - 90%
User Accessible Power	24VDC @ 0.5A
Virtual Limits (Upper Limit, Power Limit, Speed Reduction)	Standard

iQ2 SPECIFIC INFORMATION

I/O Actuator (iQ2 only)	
Inputs, Type	8, Sinking
Input Current @24VDC	6mA
Outputs, Type	4
Continuous Current/Channel	0.5A
Module Max Current	0.5A
X67 I/O Module (iQ2 Only)	
8 Channel	Input or Output
Nominal Voltage	24VDC
Input Current @24VDC	4mA
Input Type	Sinking
Outputs Type	FET
Continuous Current/Channel	0.5A
Total Nominal Current	0.5A
Handle I/O (Q2 Only)	
Inputs, Type	2, Sourcing
Input Current (max) @24VDC	60mA
Outputs, Type	2, Relay
Max Switch Current	0.5A
Max Available Current	0.5A

MATRIX MATERIAL HANDLING INC
OKC, OK (405) 858-0222
TULSA, OK (918) 384-0052
INFO@MATRIXOK.COM

www.gorbel.com
800.821.0086